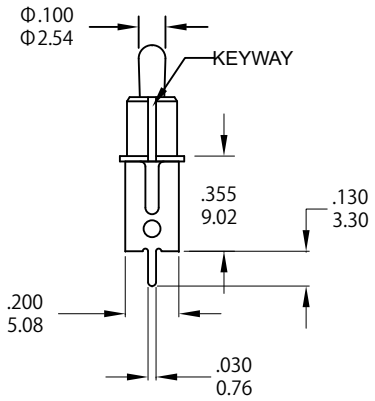

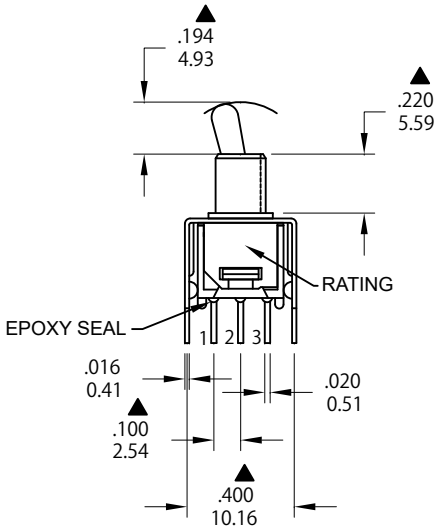

P.C. MOUNTING

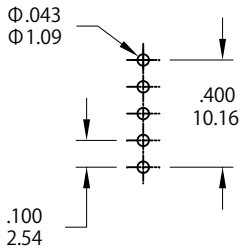

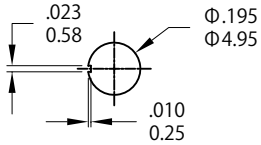

PANEL MOUNTING

Model No.	POS.1	POS.2	POS.3
2MS1	ON	NONE	ON
Term. Comm.	2-3	N/A	2-1
SCHEMATIC	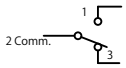		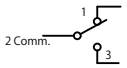

SWITCH FUNCTION

SPECIFICATIONS

MECHANICAL LIFE: 30,000 make-and-break cycles.
CONTACT RESISTANCE: 20 mΩ max. initial @ 2-4VDC
100mA for both silver and gold plated contacts.
INSULATION RESISTANCE: 1,000 MΩ min.
DIELECTRIC STRENGTH: 1,000 Vrms min.@sea level.
OPERATING TEMPERATURE: -40°C to 85°C.
Ⓐ

MATERIALS

CASE - Diallyl phthalate(DAP)(UL94V-0)
ACTUATOR - Brass,chrome plated.
Ⓐ **BUSHING -** Zinc,nickel plated.
HOUSING - Stainless Steel.
SWITCH SUPPORT - Brass,tin plated.
TERMINALS/CONTACT - Copper alloy.
RoHs & Lead Free

	CONTACT PLATING	TERMINAL PLATING	RATINGS
Q	Silver	Q = Silver	3 Amps @120 VAC or 28VDC
C	Gold over Silver	C = Gold over silver	1 Amps @250 VAC
R	Gold	R = Gold	0.4 Volt-Amps(VA) max. @20V max. (AC or DC)

COSLAND CO.,LTD.
E-MAIL: cosland@cosland.com
TEL: 886-2-2745 8908. FAX: 886-2-2765 3456.

	符號	原尺寸	修改後尺寸	變更日期
1	Ⓐ	依據N0918 迷你銅頭BRASS材質轉換壓鑄ZINC 操作溫度-30℃修訂爲-40℃		JUL-31-2017
2	Ⓑ			
3	Ⓒ			
4	Ⓓ			
5	Ⓔ			

SCALE (比例) : 3 : 2

TOLERANCE (公差) :
0.00 mm ± 0.25mm
0.0 mm ± 0.40mm
ANGULAR : ± 5°
FILE NAME : 2MSP0378

TITLE 圖 名	Sub - Miniature Toggle Switches			SIZE 圖紙	A4
DWG NO. 圖 號	2MS1T2B4VS2QES			UNIT 單位	inch mm
REV. 版本	B	DATE 日 期	DEC - 14 - 2006	SHEET 張 數	1 of 1
CHECKED BY 審 核			DRAWN BY 製 圖	ODA	