Revision Record

No.	Date	Model No.	Version	Remarks
1	Dec.07.2017	AL1602AWWB-UA-HB-U	REV.0	Sample RoHs-Compliant
2	Jan.09.2018	AL1602AWWB-UA-HB-U	REV.0	Spec RoHs-Compliant

GENERAL SPECIFICATION

ITEM	DESCRIPTION				
Product No	AL1602AWWB-UA-HB-U				
OLED Type	■ OLED White & Black				
Rear Polarizer	■ Reflective / Positive				
Backlight Type	■ OLED				
OLED Color	☐ Yellow	☐ Green	☐ Amber	■ White	☐
Temperature Range	■ Wide Temp., 5.0V, Single Supply Voltage				
Frame	■ Black				

TO BE VERY CAREFUL !

The OLED driver ICs are made by CMOS process, which are very easy to be damaged by static charge, make sure the user is grounded when handling the LCM.

※This parts comply with RoHs

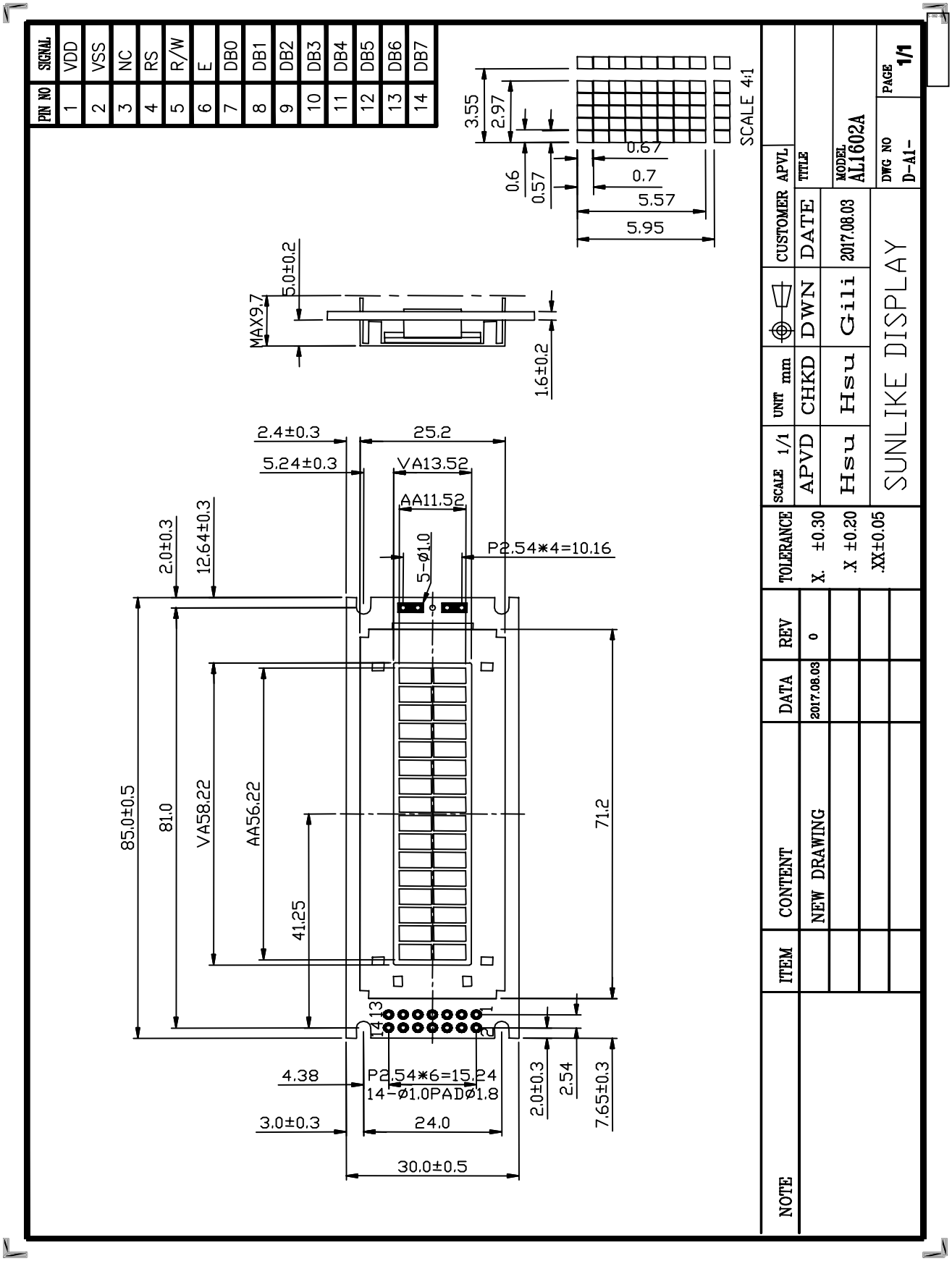
PIN NO SIGNAL
1 VDD
2 VSS
3 NC
4 RS
5 R/W
6 E
7 DB0
8 DB1
9 DB2
10 DB3
11 DB4
12 DB5
13 DB6
14 DB7
SCALE 4:1
3.55
2.97
0.67
0.6
0.57
0.7
5.57
5.95
5.0±0.2
MAX9.7
1.6±0.2
2.4±0.3
25.2
5.24±0.3
VA13.52
AA11.52
2.0±0.3
12.64±0.3
P2.54*4=10.16
5-Ø1.0
85.0±0.5
81.0
VA58.22
AA56.22
41.25
71.2
14
13
2
1
4.38
P2.54*6=15.24
14-Ø1.0PADØ1.8
3.0±0.3
24.0
30.0±0.5
2.0±0.3
2.54
7.65±0.3
SCALE 1/1
UNIT mm
CUSTOMER APVL
APVD
CHKD
DWN
DATE
Hsu
Hsu
Gili
2017.08.03
SUNLIKE DISPLAY
TITLE
MODEL AL1602A
DWG NO D-A1-
PAGE 1/1
TOLERANCE
X. ±0.30
.X ±0.20
.XX±0.05
REV 0
DATA 2017.08.03
CONTENT NEW DRAWING
ITEM
NOTE

ABSOLUTE MAXIMUM RATING

(1) Electrical Absolute Ratings

Item	Symbol	Min.	Max.	Unit	Note
Power Supply for Logic	V_{DD}-V_{SS}	-0.3	5.6	Volt	
Power Supply for OLED	V_{DD}-V_{CC}	-0.3	14.5	Volt	
Input Voltage	V_I	-0.3	V_{DD}	Volt	
Life Time (80 cd/m2)	T_a = 25°C 50% RH	50,000	---	Hour	

(2) Environmental Absolute Maximum Ratings

Item	Wide Temperature			
	Operating		Storage	
	Min,	Max.	Min,	Max.
Ambient Temperature	-40℃	+85℃	-40℃	+90℃
Humidity(without condensation)	Note 4,5		Note 4,6	

Note 2 Ta≦50℃: 80% RH max
Ta>50℃: Absolute humidity must be lower than the humidity of 85%RH at 50℃
Note 3 Ta at -20℃ will be<48hrs at 70℃will be <120hrs when humidity is higher than 70%.
Note 4 Background color changes slightly depending on ambient temperature. This phenomenon is reversible.
Note 5 Ta≦70℃: 75RH max
Ta>70℃: absolute humidity must be lower than the humidity of 75%RH at 70℃
Note 6 Ta at -30℃ will be <48hrs, at 80 ℃ will be <120hrs when humidity is higher than 70%.

ELECTRICAL CHARACTERISTICS

Item	Symbol	Condition	Min.	Typ	Max.	Unit	note
Power Supply for Logic	V_{DD}-V_{SS}	-	4.5	5.0	5.5	Volt	
Power Supply for OLED	V_{CC}-V_{SS}	-	11.2	12.0	12.5	Volt	
Input Voltage	V_{IL}	L level	0	-	0.3 V_{DD}	Volt	
	V_{IH}	H level	0.7 V_{DD}	-	V_{DD}	Volt	
Output Voltage	V_{OL}	L level	0	-	0.3 V_{DD}		
	V_{OH}	H level	0.7 V_{DD}	-	V_{DD}		
LCM Recommend OLED Module Driving Voltage	V_O –V_{SS}	Ta＝0℃	-	-	-	Volt	
		Ta＝25℃	9.0	10.0	11.5		
		Ta＝50℃	-	-	-		
Power Supply Current for OLED	I_{DD}	V_{DD} =5.0V V_O-V_{SS} =10.0V	-	50.0	80.0	mA	

OPTICAL CHARACTERISTICS

Item	Symbol	Condition	Min.	Typ	Max.	Unit	note
Viewing angle range	Φf(12 o'clock)	When Cr≧ 10000:1	-	75	-	Degree	9,10
	Φb(6 o'clock)		-	75	-		
	Φl(9 o'clock)		-	65	-		
	Φr(3 o'clock)		-	65	-		
Rise Time	Tr	V_O-V_{SS} =10.0V Ta=25℃	-	40		mS	
Fall Time	Tf		-	40			
Frame frequency	Frm		-	64	-	Hz	8,10
Contrast	Cr		-	10000:1	-		7
Brightness	L		60	80	-	cd/m²	
Peak Emission Wavelength	C.I.E (White)		X=0.25 Y=0.27	X=0.29 Y=0.31	X=0.33 Y=0.35	nm	

MECHANICAL SPECIFICATION

ITEM	DESCRIPTION
Product No.	AL1602A
Viewing Area	58.22(W)mm×13.52(H)mm
Module Size	85.0(W)×30.0(H)×9.7 max(D)
Dot Size	0.57(W)mm×0.67(H)mm
Dot Pitch	0.60(W)mm×0.70(H)mm
Display Format	16 characters (W)×2 lines (H)
Controller Interface	KS0066 or Equivalent 8-bit 68xx-Series MPU Parallel
ROM Selection	English_Japanese Character Font Table
Built-in	With DC/DC Converter

INTERFACE PIN ASSIGNMENT

Pin No.	Pin Out	Level	Description
1	VDD	5.0V	Power Supply Voltage
2	VSS	0V	Power Supply Ground
3	NC	---	No Connector
4	RS	H/L	Register Select
5	R/W	H/L	Read / Write
6	E	H,H→L	Enable Signal
7	DB0	H/L	Data Bit 0
8	DB1	H/L	Data Bit 1
9	DB2	H/L	Data Bit 2
10	DB3	H/L	Data Bit 3
11	DB4	H/L	Data Bit 4
12	DB5	H/L	Data Bit 5
13	DB6	H/L	Data Bit 6
14	DB7	H/L	Data Bit 7

[Note 7] Definition of Operation Voltage (Vop)

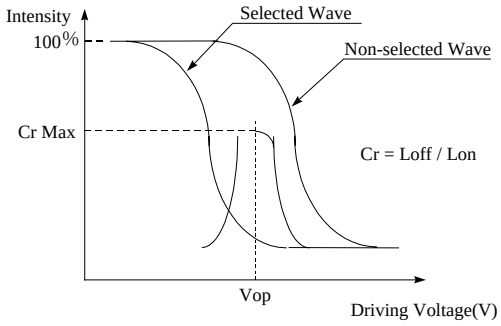

[positive type]

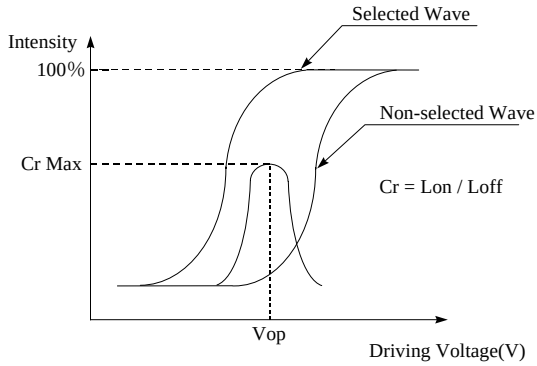

[Negative type]

[Note 8] Definition of Response Time (Tr, Tf)

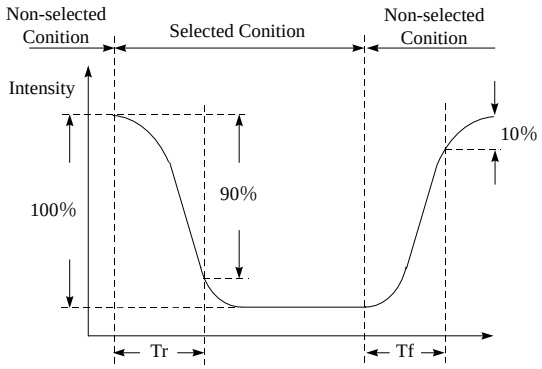

[positive type]

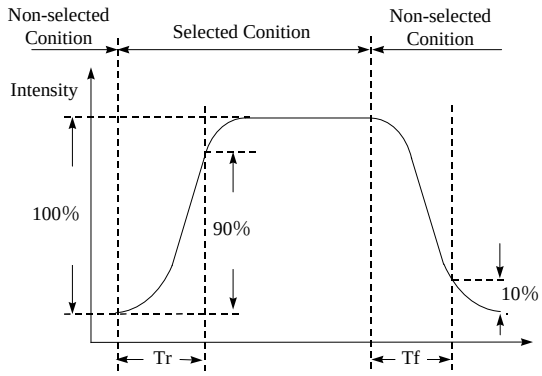

[Negative type]

Conditions:

Operating Voltage : Vop **Viewing Angle(θ , φ): 0° , 0°**

Frame Frequency : 64 Hz **Driving Wave form : 1/N duty, 1/a bias**

[Note 9] Definition of Viewing Direction

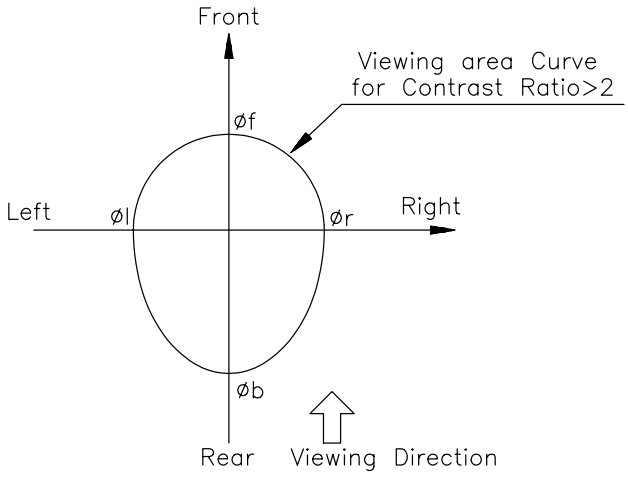

[Note 10] Definition of viewing angle

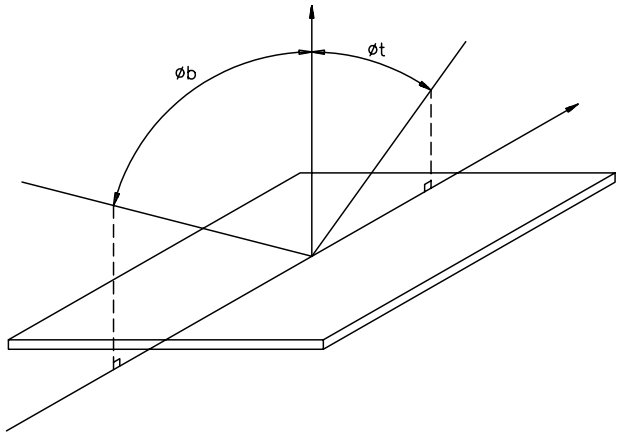

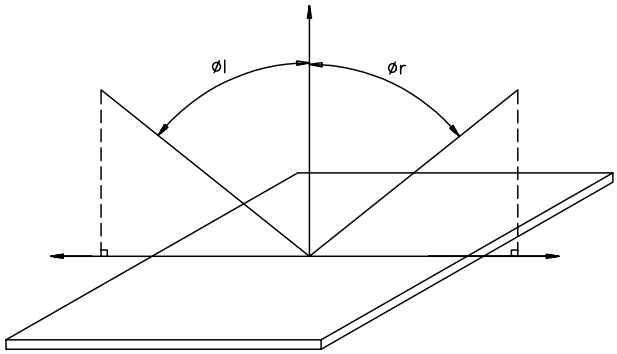

BLOCK DIAGRAM

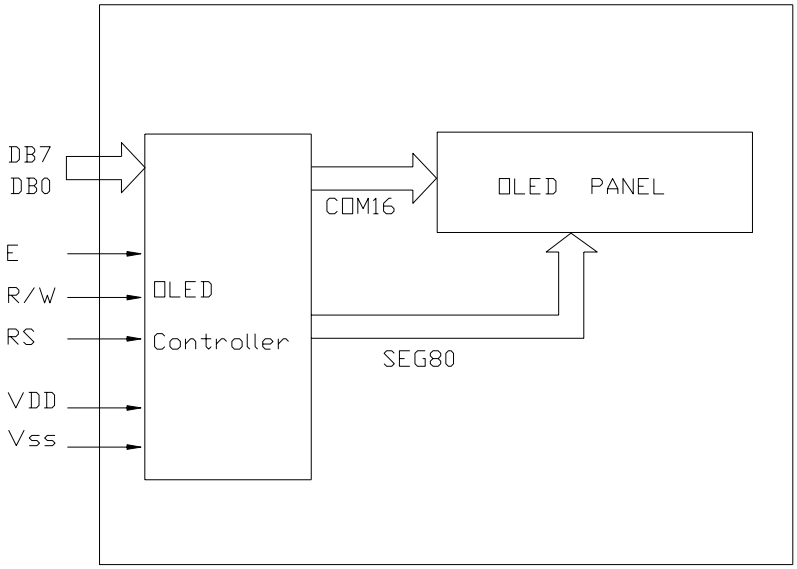

POWER SUPPLY

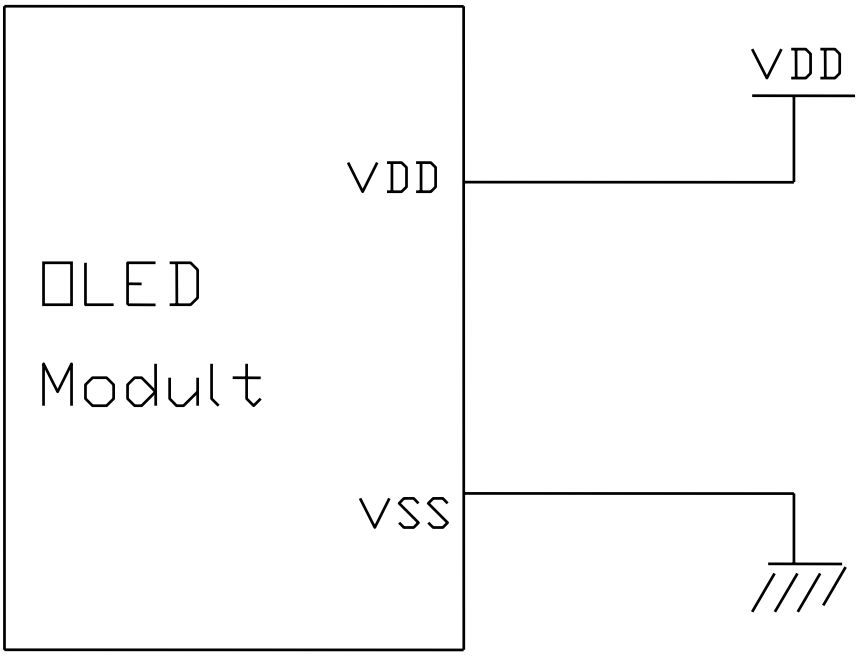

TIMING CHARACTERISTICS

Symbol	Description	Min	Max	Unit
t_{CYC8}	System cycle time	500	-	ns
t_{AS8}	Address setup time	0	-	ns
t_{AH8}	Address hold time	0	-	ns
t_{DS8}	Data setup time	66	-	ns
t_{DH8}	Data hold time	25	-	ns
t_{CH8}	Output disable time(C_L = 100pF)	16	110	ns
t_{ACC8}	$\overline{RD}$ access time (C_L = 100pF)	-	230	ns
t_{CCLW}	Control L pulse width (WR)	166	-	ns
t_{CCLR}	Control L pulse width (RD)	200	-	ns
t_{CCHW}	Control H pulse width (WR)	166	-	ns
t_{CCHR}	Control H pulse width (RD)	166	-	ns
t_R	Rise time	-	25	ns
t_F	Fall time	-	25	ns

* (V_{DD1} = 2.2 – 5.5V, TA = +25°C)

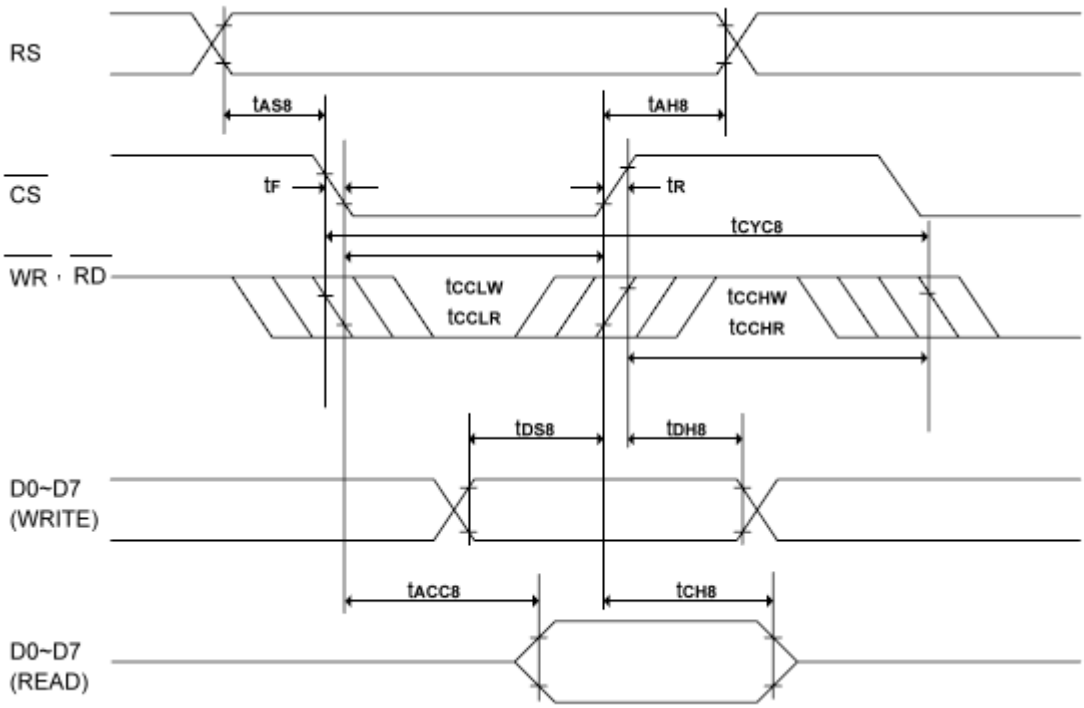

FUNCTIONAL SPECIFICATION

Commands

Power down and Power up Sequence

To protect OEL panel and extend the panel life time, the driver IC power up/down routine should include a delay period between high voltage and low voltage power sources during turn on/off. It gives the OEL panel enough time to complete the action of charge and discharge before/after the operation.

4.2.1 Power up Sequence

1. Power up V_{DD1} & V_{DD2}
2. Send Display off command
3. Initialization
4. Clear Screen
5. Power up V_{PP}
6. Delay 100ms
   (When V_{PP} is stable)
7. Send Display on command

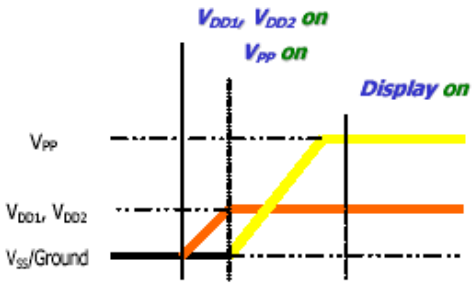

4.2.2 Power down Sequence

1. Send Display off command
2. Power down V_{PP}
3. Delay 100ms
   (When V_{PP} is reach 0 and panel is completely discharges)
4. Power down V_{DD1} & V_{DD2}

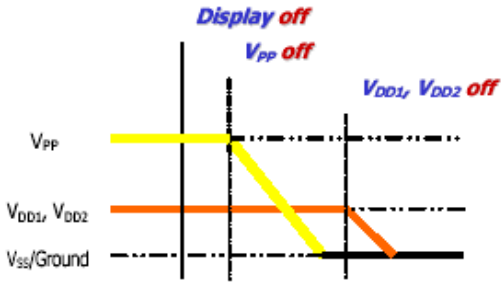

Note :

1) Since an ESD protection circuit is connected between V_{DD1}, V_{DD2} and V_{PP} inside the driver IC, V_{CC} becomes lower than V_{DD1} & V_{DD2} whenever V_{DD1} & V_{DD2} is ON and V_{PP} is OFF.
2) V_{CC} should be kept float (disable) when it is OFF.
3) Power Pins (V_{DD1}, V_{DD2}, V_{PP}) can never be pulled to ground under any circumstance.
4) V_{DD1} & V_{DD2} should not be power down before V_{PP} power down.

RESET CIRCUIT

When RES# input is low, the chip is initialized with the following status:

1. Display is OFF
2. 5×8 Character Mode
3. Display start position is set at display RAM address 0
4. CGRAM address counter is set at 0
5. Cursor is OFF
6. Blink is OFF
7. Contrast control register is set at 7Fh
8. OLED command set is disabled
9. SEG direction set: SEG1 → SEG100
10. COM direction set: COM1 → COM32
11. Software set Font table disable
12. Font table select: Font table 1

ACTUAL APPLICATION EXAMPLE

<Power up Sequence>

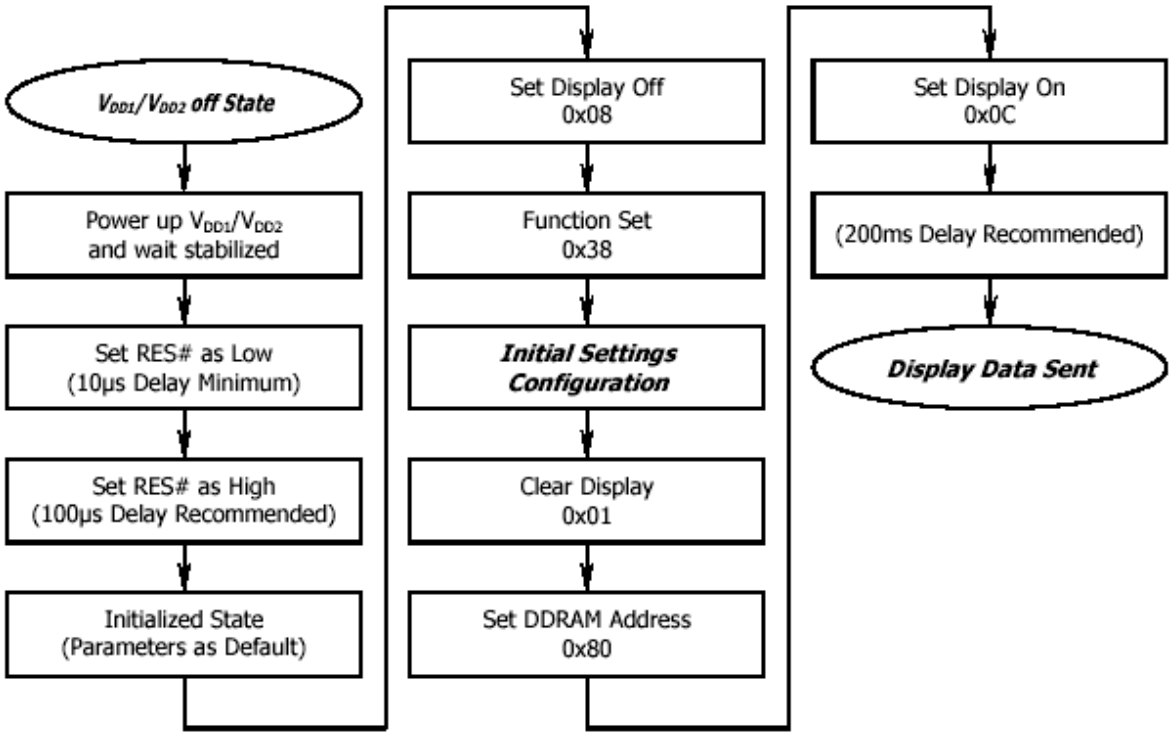

CGROM CHARACTER CODE

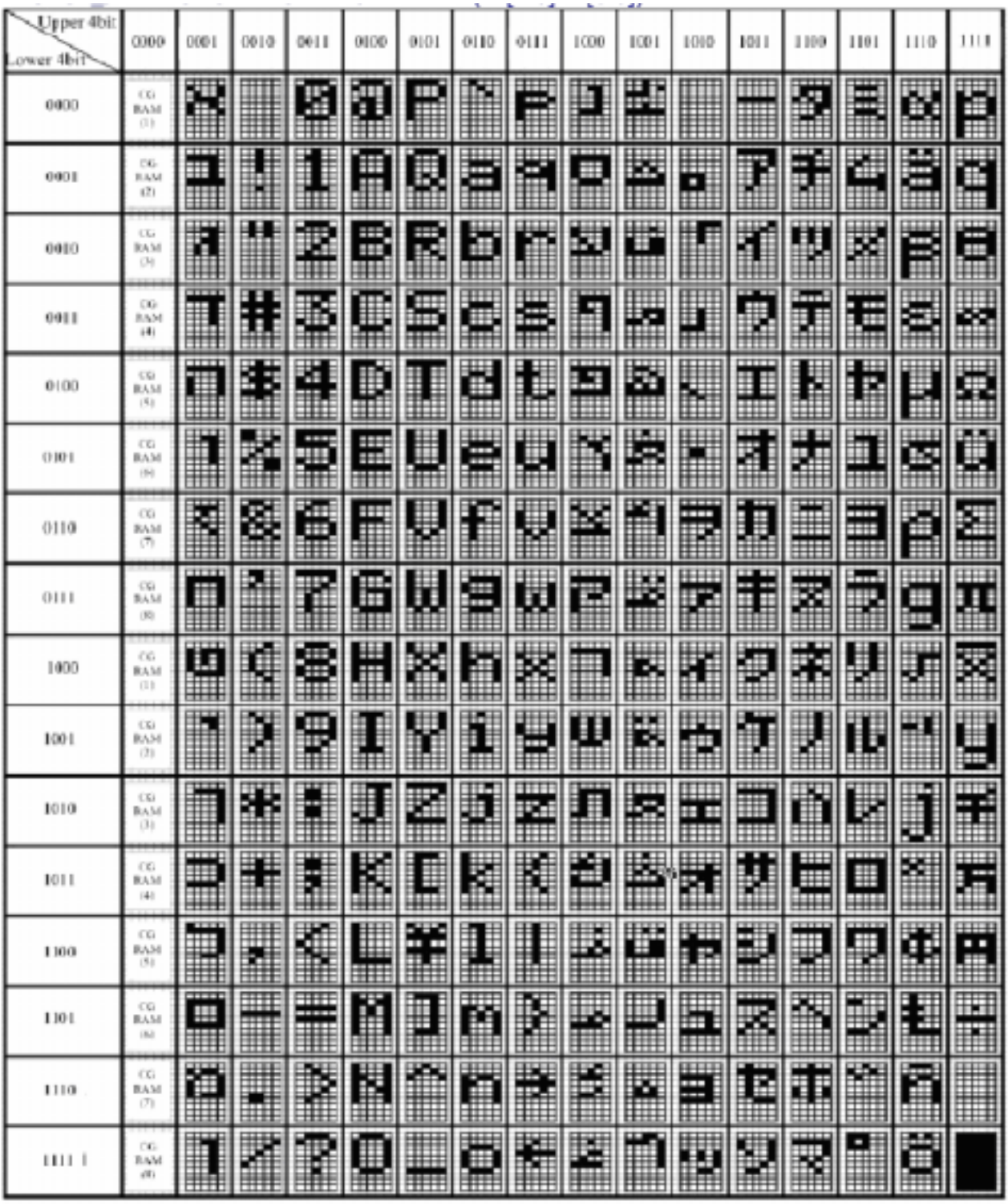

COMMANDS

Instruction	Instruction Code										Description	Description Time (270KHz)
	RS	R/W	DB7	DB6	DB5	DB4	DB3	DB2	DB1	DB0		
Clear Display	0	0	0	0	0	0	0	0	0	1	Write "20H" to DDRAM. and set DDRAM address to "00H" from AC	1.52 ms
Return Home	0	0	0	0	0	0	0	0	1	x	Set DDRAM address to "00H" from AC and return cursor to its original position if shifted. The contents of DDRAM are not changed.	1.52 ms
Entry Mode Set	0	0	0	0	0	0	0	1	I/D	S	Sets cursor move direction and specifies display shift. These operations are performed during data write and read.	37 us
Display ON/OFF	0	0	0	0	0	0	1	D	C	B	D=1:entire display on C=1:cursor on B=1:cursor position on	37 us
Cursor or Display Shift	0	0	0	0	0	1	S/C	R/L	x	x	Set cursor moving and display shift control bit, and the direction, without changing DDRAM data.	37 us
Function Set	0	0	0	0	1	DL	N	F	x	x	DL:interface data is 8/4 bits N:number of line is 2/1 F:font size is 5x11/5x8	37 us
Set CGRAM address	0	0	0	1	AC5	AC4	AC3	AC2	AC1	AC0	Set CGRAM address in address counter	37 us
Set DDRAM address	0	0	1	AC6	AC5	AC4	AC3	AC2	AC1	AC0	Set DDRAM address in address counter	37 us
Read Busy flag and address	0	1	BF	AC6	AC5	AC4	AC3	AC2	AC1	AC0	Whether during internal operation or not can be known by reading BF. The contents of address counter can also be read.	0 us
Write data to RAM	1	0	D7	D6	D5	D4	D3	D2	D1	D0	Write data into internal RAM (DDRAM/CGRAM)	37 us
Read data from RAM	1	1	D7	D6	D5	D4	D3	D2	D1	D0	Read data from internal RAM (DDRAM/CGRAM)	37 us

Note:
Be sure the ST7066U is not in the busy state (BF = 0) before sending an instruction from the MPU to the ST7066U. If an instruction is sent without checking the busy flag, the time between the first instruction and next instruction will take much longer than the instruction time itself. Refer to Instruction Table for the list of each instruction execution time.

HANDLING PRECAUTION

1. Mounting Method

The panel of the LCD Module consists of two thin glass plates with polarizes which easily get damaged since the Module is fixed by utilizing fitting holes in the printed circuit board. Extreme care should be taken when handling the LCD Modules.

2. Caution of LCD handling & cleaning

When cleaning the display surface, use soft cloth with solvent (recommended below) and Wipe lightly.

-Isopropyl alcohol

-Ethyl alcohol

-Trichlorotriflorothane

Do not wipe the display surface with dry or hard materials that will damage the polarize surface.

Do not use the following solvent：

-Water

-Kettle

-Aromatics

3. Caution against static charge

The LCD Module use C-MOSLSI drivers, so we recommend end that you connect any unused input terminal to VDD or VSS, do not input any signals before power is turned on. And ground your body, Work/assembly table. And assembly equipment to protect against static electricity.

4. Packaging

-Modules use LCD elements, and must be treated as such. Avoid in tense shock and falls from a height.

-To prevent modules from degradation. Do not operate or store them exposed directly to sunshine or high temperature/humidity.

5. Caution for operation

-It is indispensable to drive LCD’s with in the specified voltage limit since the higher voltage than the limit shorten LCD life.

An electrochemical reaction due to direct current causes LCD deterioration, Avoid the use of direct current drive.

-Response time will be extremely delayed at lower temperature than the operating temperature range and on the other hand at higher temperature LCD's show dark color in them. However those phenomena do not mean malfunction or out of order with LCD's. Which will come back in the specified operating temperature range.

- If the display area is pushed hard during operation, some font will be abnormally displayed but it resumes normal condition after turning off once.
- A slight dew depositing on terminals is a cause for electro-chemical reaction resulting in terminal open circuit. Usage under the relative condition of 40 ℃, 50%RH or less is required.

6. Storage

In the case of storing for a long period of time (for instance. For years) for the purpose or replacement use, The following ways are recommended.

- Storage in a polyethylene bag with sealed so as not to enter fresh air outside in it, And with no desiccant.
- Placing in a dark place where neither exposure to direct sunlight nor light is. Keeping temperature in the specified storage temperature range.

-Storing with no touch on polarizer surface by the anything else. (It is recommended to store them as they have been contained in the inner container at the time of delivery)

7. Safety

- It is recommendable to crash damaged or unnecessary LCD into pieces and wash off liquid crystal by using solvents such as acetone and ethanol. Which should be burned up later.
- When any liquid crystal leaked out of a damaged glass cell comes in contact with your hands, please wash it off well with soap and water.