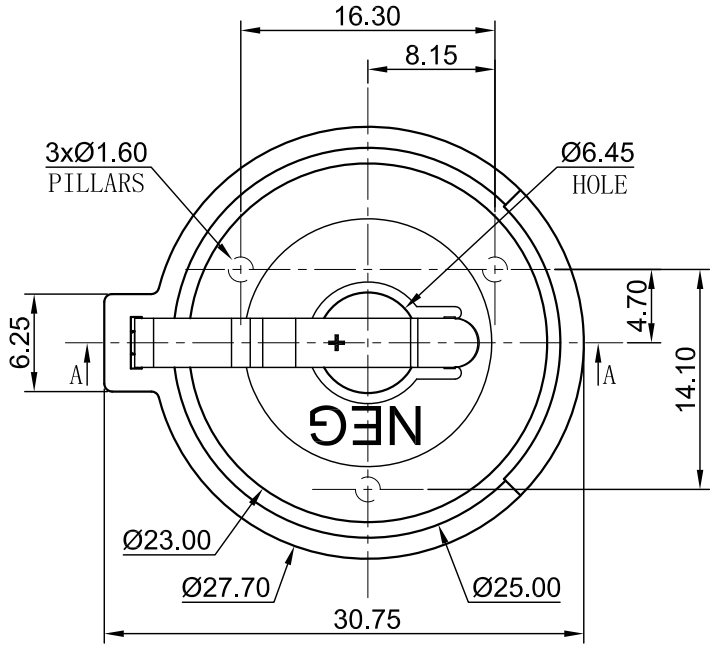

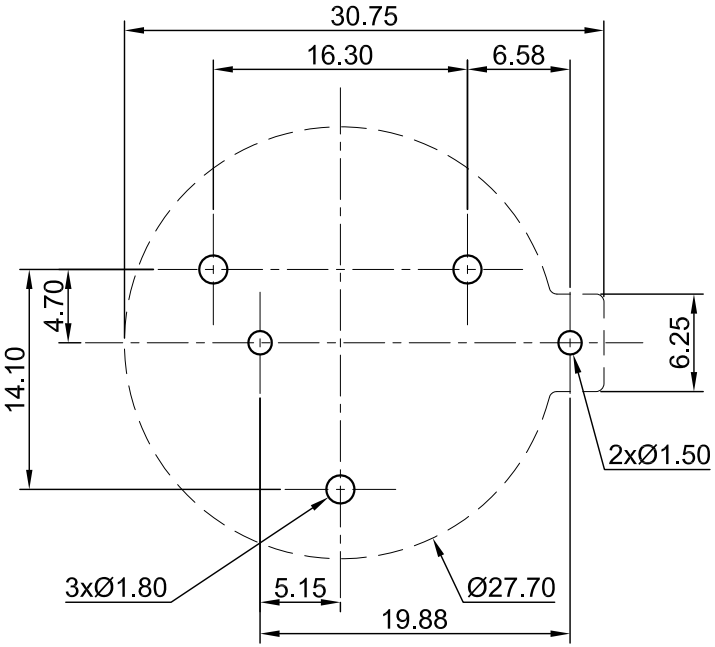

PCB MOUNTING LAYOUT

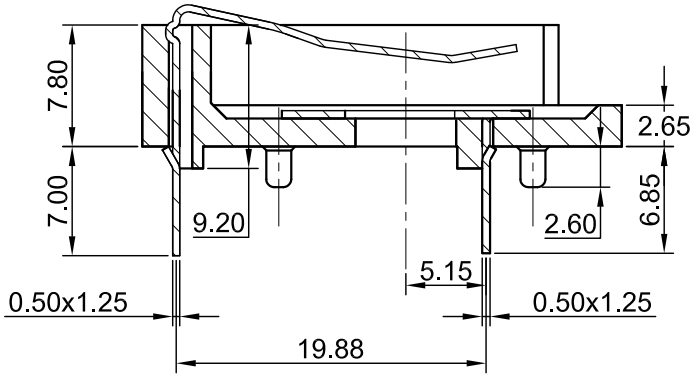

SECTION A-A

SPECIFICATION

(1) ITEM NO.: CH032-2477LF
(2) HOUSING MATERIAL:PBT UL94V0, BLACK COLOR
(3) CONTACT MATERIAL:0.5MM SPRING STEEL NICKEL PLATED
(4) CURRENT RATING : 0.5A (AC/DC)
(5) VOLTAGE RATING : 500V (AC/DC)
(6) CONTACT RESISTANCE: 30 MILLIOHMS
(7) INSULATION RESISTANCE: 1000 MEGAOHMS
(8) TEMPERATURE RANGE: -55° C TO +85° C
(9) HUMIDITY: 40° C AND 90-95% RH FOR 96 HOURS
(10) RoHS COMPLIANT

NO.	MODIFICATION	DATE
3		
2		
1		

General Tolerances			
0 ~ >3	± 0.10	30 ~ >120	± 0.30
3 ~ >6	± 0.10	120~ >400	± 0.50
6 ~ >30	± 0.20	Angle: ± 3°	

The Third Angle Projection

COMF COMFORTABLE ELECTRONIC CO.LTD.

NAME	COIN CELL HOLDER: CH032-2477LF		
SCALE	2:1	APPD	
UNIT	MM	CHKD	
MAT'L	SEE SPEC.	DWN	
DATE	NOV. 18. 2013	DR NO	CH032-1113