Features

- 72 V rated
- Radial leaded devices
- Cured, flame retardant epoxy polymer insulating material meets UL 94 V-0 requirements
- RoHS compliant* and halogen free**
- Agency recognition: c UL us, TÜV

Applications

Almost anywhere there is a low voltage power supply, up to 72 V and a load to be protected, including:

- Security and fire alarm systems
- Loudspeakers
- Power transformers

MF-RX/72 Series - PTC Resettable Fuses

Electrical Characteristics

Model	V max. Volts	I max. Amps	I_{hold}	I_{trip}	Initial Resistance		1 Hour (R_1) Post-Trip Resistance	Max. Time To Trip		Tripped Power Dissipation
			Amperes at 23 °C		Ohms at 23 °C		Ohms at 23 °C	Amperes at 23 °C	Seconds at 23 °C	Watts at 23 °C
			Hold	Trip	Min.	Max.	Max.			Typ.
MF-RX020/72	72	40	0.20	0.40	1.50	2.84	4.40	1.0	2.2	0.40
MF-RX025/72	72	40	0.25	0.50	1.00	1.95	3.00	1.25	2.5	0.45
MF-RX030/72	72	40	0.30	0.60	0.76	1.36	2.10	1.5	3.0	0.50
MF-RX040/72	72	40	0.40	0.80	0.52	0.86	1.29	2.0	3.9	0.55
MF-RX050/72	72	40	0.50	1.00	0.41	0.77	1.17	2.5	4.0	0.75
MF-RX065/72	72	40	0.65	1.30	0.27	0.48	0.72	3.25	5.3	0.90
MF-RX075/72	72	40	0.75	1.50	0.18	0.40	0.60	3.75	6.3	0.90
MF-RX090/72	72	40	0.90	1.80	0.14	0.31	0.47	4.5	7.2	1.00
MF-RX110/72	72	40	1.10	2.20	0.15	0.25	0.38	5.5	8.2	1.50
MF-RX135/72	72	40	1.35	2.70	0.12	0.19	0.30	6.75	9.6	1.70
MF-RX160/72	72	40	1.60	3.20	0.09	0.14	0.22	8.0	11.4	1.90
MF-RX185/72	72	40	1.85	3.70	0.08	0.12	0.19	9.25	12.6	2.10
MF-RX250/72	72	40	2.50	5.00	0.05	0.08	0.13	12.5	15.6	2.50
MF-RX300/72	72	40	3.00	6.00	0.04	0.06	0.10	15.0	19.8	2.80
MF-RX375/72	72	40	3.75	7.50	0.03	0.05	0.08	18.75	24.0	3.20

Environmental Characteristics

Operating/Storage Temperature	-40 °C to +85 °C	
Maximum Device Surface Temperature in Tripped State	125 °C	
Passive Aging	+85 °C, 1000 hours	±5 % typical resistance change
Humidity Aging	+85 °C, 85 % R.H. 1000 hours	±5 % typical resistance change
Thermal Shock	+85 °C to -55 °C, 10 times	±10 % typical resistance change
Solvent Resistance	MIL-STD-202, Method 215	No change
Vibration	MIL-STD-883C, Method 2007.1, Condition A	No change

Test Procedures And Requirements For Model MF-RX/72 Series

Test	Test Conditions	Accept/Reject Criteria
Visual/Mech.	Verify dimensions and materials	Per MF physical description
Resistance	In still air @ 23 °C	Rmin ≤ R ≤ Rmax
Time to Trip	5 times Ihold, Vmax, 23 °C	T ≤ max. time to trip (seconds)
Hold Current	30 min. at Ihold	No trip
Trip Cycle Life	Vmax, Imax, 100 cycles	No arcing or burning
Trip Endurance	Vmax, 48 hours	No arcing or burning

UL File Number E174545
http://www.ul.com/ Follow link to Certifications, then UL File No., enter E174545

TÜV Certificate Number ..... R 02057213
http://www.tuvdotcom.com/ Follow link to “other certificates”, enter File No. 2057213

* RoHS Directive 2002/95/EC Jan. 27, 2003 including annex and RoHS Recast 2011/65/EU June 8, 2011.
** Bourns considers a product to be “halogen free” if (a) the Bromine (Br) content is 900 ppm or less; (b) the Chlorine (Cl) content is 900 ppm or less; and (c) the total Bromine (Br) and Chlorine (Cl) content is 1500 ppm or less.

Specifications are subject to change without notice.
The device characteristics and parameters in this data sheet can and do vary in different applications and actual device performance may vary over time.
Users should verify actual device performance in their specific applications.

Additional Features

- Resettable circuit protection
- Bulk packaging, tape and reel and Ammo-Pak available on most models

MF-RX/72 Series - PTC Resettable Fuses

BOURNS®

Product Dimensions

Model	A	B	C		D	E	Physical Characteristics		
	Max.	Max.	Nom.	Tol. ±	Min.	Max.	Style	Lead Dia.	Material
MF-RX020/72	7.4 (0.291)	12.7 (0.5)	5.1 (0.201)	0.7 (0.028)	7.6 (0.30)	3.1 (0.122)	1	0.51 (0.020)	Sn/CuFe
MF-RX025/72	7.4 (0.291)	12.7 (0.5)	5.1 (0.201)	0.7 (0.028)	7.6 (0.30)	3.1 (0.122)	1	0.51 (0.020)	Sn/CuFe
MF-RX030/72	7.4 (0.291)	13.4 (0.528)	5.1 (0.201)	0.7 (0.028)	7.6 (0.30)	3.1 (0.122)	1	0.51 (0.020)	Sn/CuFe
MF-RX040/72	7.4 (0.291)	13.7 (0.539)	5.1 (0.201)	0.7 (0.028)	7.6 (0.30)	3.1 (0.122)	1	0.51 (0.020)	Sn/CuFe
MF-RX050/72	7.9 (0.311	13.7 (0.539)	5.1 (0.201)	0.7 (0.028)	7.6 (0.30)	3.1 (0.122)	1	0.51 (0.020)	Sn/Cu
MF-RX065/72	9.7 (0.382)	15.2 (0.598)	5.1 (0.201)	0.7 (0.028)	7.6 (0.30)	3.1 (0.122)	1	0.51 (0.020)	Sn/Cu
MF-RX075/72	10.4 (0.409)	16.0 (0.630)	5.1 (0.201)	0.7 (0.028)	7.6 (0.30)	3.1 (0.122)	1	0.51 (0.020)	Sn/Cu
MF-RX090/72	11.7 (0.461)	16.70 (0.657)	5.1 (0.201)	0.7 (0.028)	7.6 (0.30)	3.1 (0.122)	1	0.51 (0.020)	Sn/Cu
MF-RX110/72	10.84 (0.427)	16.84 (0.662)	5.1 (0.201)	0.7 (0.028)	7.6 (0.30)	3.1 (0.122)	2	0.81 (0.032)	Sn/Cu
MF-RX135/72	12.26 (0.483)	18.26 (0.718)	5.1 (0.201)	0.7 (0.028)	7.6 (0.30)	3.1 (0.122)	2	0.81 (0.032)	Sn/Cu
MF-RX160/72	13.94 (0.549)	19.94 (0.785)	5.1 (0.201)	0.7 (0.028)	7.6 (0.30)	3.1 (0.122)	2	0.81 (0.032)	Sn/Cu
MF-RX185/72	15.18 (0.598)	21.18 (0.833)	5.1 (0.201)	0.7 (0.028)	7.6 (0.30)	3.1 (0.122)	2	0.81 (0.032)	Sn/Cu
MF-RX250/72	17.84 (0.702)	23.84 (0.938)	10.2 (0.402)	0.7 (0.028)	7.6 (0.30)	3.1 (0.122)	2	0.81 (0.032)	Sn/Cu
MF-RX300/72	20.67 (0.814)	26.67 (1.050)	10.2 (0.402)	0.7 (0.028)	7.6 (0.30)	3.1 (0.122)	2	0.81 (0.032)	Sn/Cu
MF-RX375/72	23.51 (0.926)	29.51 (1.161)	10.2 (0.402)	0.7 (0.028)	7.6 (0.30)	3.1 (0.122)	2	0.81 (0.032)	Sn/Cu

Packaging options:
BULK: 500 pcs. per bag.
TAPE & REEL: MF-RX020/72-2 ~ MF-RX090/72-2 = 3000 pcs. per reel; MF-RX110/72-2 ~ MF-RX160/72-2 = 1500 pcs. per reel; MF-RX185/72-2 - MF-RX375/72-2 = 1000 pcs. per reel.
AMMO-PACK: MF-RX020/72-AP ~ MF-RX090/72-AP = 2000 pcs. per pack; MF-RX110/72-AP ~ MF-RX160/72-AP = 1000 pcs. per pack; MF-RX185/72-AP - MF-RX375/72-AP = 500 pcs. per pack.

DIMENSIONS: MM (INCHES)

Style 1 **Style 2**

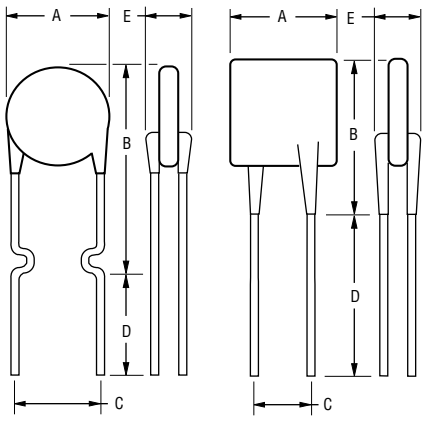

Also available with kinked and straight leads in place of standard leads (see How to Order).

Typical Part Marking

Represents total content. Layout may vary.

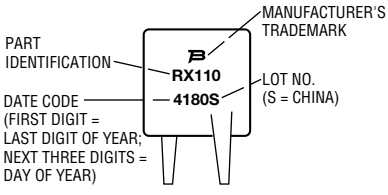

How to Order

MF - RX 110/72 - 2 - 14

Multifuse® Product Designator

Series
RX = Radial Leaded Component

Hold Current, Ihold
020-375 (0.20 A - 3.75 A)

Maximum Voltage, Vmax
72 (72 Volts)

Packaging Options
- 0 = Bulk Packaging
- 2 = Tape and Reel*
- AP = Ammo-Pak*

Part Number Suffix Option
- 14 = Kinked Leads in Place of Standard Straight Leads
- 17 = Straight Leads in Place of Standard Kinked Leads

*Packaged per EIA 486-B

Specifications are subject to change without notice.
The device characteristics and parameters in this data sheet can and do vary in different applications and actual device performance may vary over time.
Users should verify actual device performance in their specific applications.

Typical Time to Trip at 23 ˚C

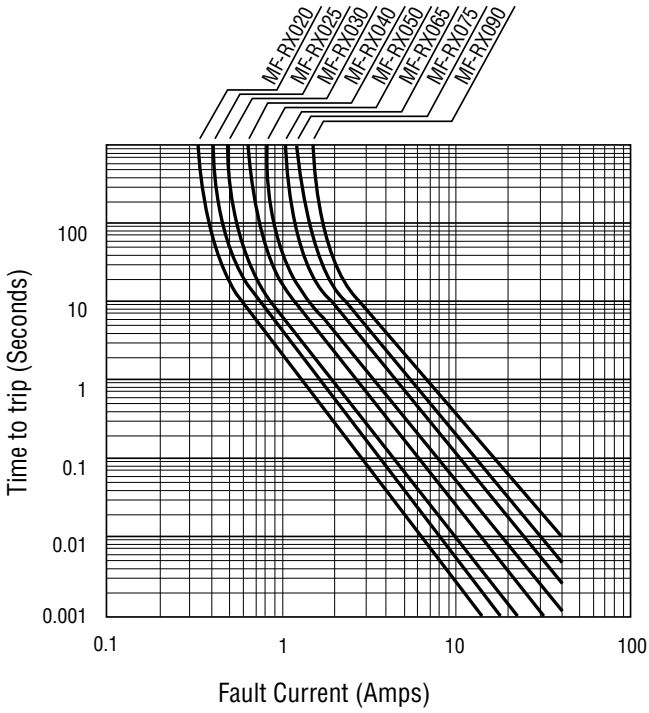

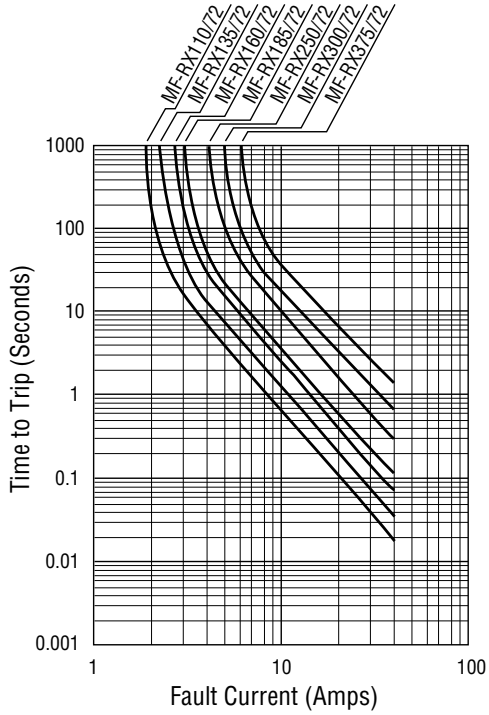

The Time to Trip curves represent typical performance of a device in a simulated application environment. Actual performance in specific customer applications may differ from these values due to the influence of other variables.

Thermal Derating Chart - I_{hold} (Amps)

Model	Ambient Operating Temperature								
	-40 °C	-20 °C	0 °C	23 °C	40 °C	50 °C	60 °C	70 °C	85 °C
MF-RX020/72	0.31	0.27	0.24	0.20	0.16	0.14	0.13	0.11	0.08
MF-RX025/72	0.39	0.34	0.30	0.25	0.20	0.18	0.16	0.14	0.10
MF-RX030/72	0.47	0.41	0.36	0.30	0.24	0.22	0.19	0.16	0.12
MF-RX040/72	0.62	0.54	0.48	0.40	0.32	0.29	0.25	0.22	0.16
MF-RX050/72	0.78	0.68	0.60	0.50	0.41	0.36	0.32	0.27	0.20
MF-RX065/72	1.01	0.88	0.77	0.65	0.53	0.47	0.41	0.35	0.26
MF-RX075/72	1.16	1.02	0.89	0.75	0.61	0.54	0.47	0.41	0.30
MF-RX090/72	1.40	1.22	1.07	0.90	0.73	0.65	0.57	0.49	0.36
MF-RX110/72	1.71	1.50	1.31	1.10	0.89	0.79	0.69	0.59	0.44
MF-RX135/72	2.09	1.84	1.61	1.35	1.09	0.97	0.85	0.73	0.54
MF-RX160/72	2.48	2.18	1.90	1.60	1.30	1.15	1.01	0.86	0.64
MF-RX185/72	2.87	2.52	2.20	1.85	1.50	1.33	1.17	1.00	0.74
MF-RX250/72	3.88	3.40	2.98	2.50	2.03	1.80	1.58	1.35	1.00
MF-RX300/72	4.65	4.08	3.57	3.00	2.43	2.16	1.89	1.62	1.20
MF-RX375/72	5.81	5.10	4.46	3.75	3.04	2.70	2.36	2.03	1.50

Specifications are subject to change without notice.
The device characteristics and parameters in this data sheet can and do vary in different applications and actual device performance may vary over time.
Users should verify actual device performance in their specific applications.

Devices taped using EIA468–B/IEC286-2 standards. See table below and Figures 1 and 2 for details.

Dimension Description	IEC Mark	EIA Mark	Dimensions	
			Dimensions	Tolerance
Carrier tape width	W	W	18 (.709)	-0.5/+1.0 (-0.02/+.039)
Hold down tape width	W_0	W_4	11 (.433)	min.
Hold down tape			No protrusion	
Top distance between tape edges	W_2	W_6	3 (.118)	max.
Sprocket hole position	W_1	W_5	9 (.354)	-0.5/+0.75 (-0.02/+0.03)
Sprocket hole diameter	D_0	D_0	4 (.157)	±0.2 (±.0078)
Abscissa to plane (straight lead)	H	H	18.5 (.728)	±3.0 (±.118)
Abscissa to plane (kinked lead)	H_0	H_0	16 (.63)	±0.5 (±.02)
Abscissa to top (straight lead)	H_1	H_1	38.0 (1.496)	max.
Abscissa to top (kinked lead)	H_1	H_1	32.2 (1.268)	max.
Overall width w/lead protrusion (straight lead)		C_1	55.0 (2.165)	max.
Overall width w/lead protrusion (kinked lead)		C_1	43.2 (1.7)	max.
Overall width w/o lead protrusion (straight lead)		C_2	54.0 (2.126)	max.
Overall width w/o lead protrusion (kinked lead)		C_2	42.5 (1.673)	max.
Lead protrusion	l_1	L_1	1.0 (.039)	max.
Protrusion of cutout	L	L	11 (.433)	max.
Protrusion beyond hold-down tape	l_2	l_2	Not specified	
Sprocket hole pitch	P_0	P_0	12.7 (0.5)	±0.3 (±.012)
Pitch tolerance			20 consecutive	±1 (±.039)
Device pitch: MF-R005–MF-R160, MF-R/90, MF-RX020/72–MF-RX030/72			12.7 (0.5)	±0.3 (±.012)
Device pitch: MF-R185–MF-R400, MF-R/600, MF-RX110–MF-RX375 MF-RX040/72–MF-RX375/72			25.4 (1.0)	±0.6 (±.024)
Tape thickness	t	t	0.9 (.035)	max.
Tape thickness with splice: MF-R010–MF-R160, MF-RX110/72–MF-RX185/72		t_1	1.5 (.059)	max.
Tape thickness with splice: MF-R250–MF-R1100, MF-RX110–MF-RX375, MF-R/90, MF-RX250/72-MF-RX375/72		t_1	2.3 (.091)	max.
Splice sprocket hole alignment			0	±0.3 (±.012)
Body lateral deviation	Δ_h	Δ_h	0	±1.0 (±.039)
Body tape plane deviation	Δ_p	Δ_p	0	±1.3 (±.051)

DIMENSIONS: MM (INCHES)

Specifications are subject to change without notice.
The device characteristics and parameters in this data sheet can and do vary in different applications and actual device performance may vary over time.
Users should verify actual device performance in their specific applications.

Dimension Description	IEC Mark	EIA Mark	Dimensions: Dimensions	Dimensions: Tolerance
Lead spacing: MF-R, MF-R/90, MF-R/600, MF-RX, MF-RX/72	*F*	*F*	5.08 (0.2)	±0.2 (±0.008)
Reel width	*w*	W_2	56.0 (2.205)	max.
Reel diameter	*d*	*a*	370.0 (14.57)	max.
Space between flanges less device	W_1	*h*	4.75 (.187)	±3.25 (±.128)
Arbor hole diameter	*f*	*c*	26.0 (1.024)	±12.0 (±.472)
Core diameter: MF-R, MF-RX, MF-R/90	*h*	*n*	80 (3.15)	max.
Core diameter: MF-R/600	*h*	*n*	91 (3.58)	max.
Box: MF-R, MF-RX, MF-R/90			62 (2.44) / 355 (14.0) / 345 (13.6)	nom.
Box: MF-R/600			64 (2.52) / 372 (14.6) / 362 (14.25)	max.
Consecutive missing places: MF-R, MF-RX, MF-R/90			3	max.
Consecutive missing places: MF-R/600			none	
Empty places per reel: MF-R, MF-RX, MF-R/90			Not specified	
Empty places per reel: MF-R/600			0.1 %	

Taped Component Dimensions - Figure 1

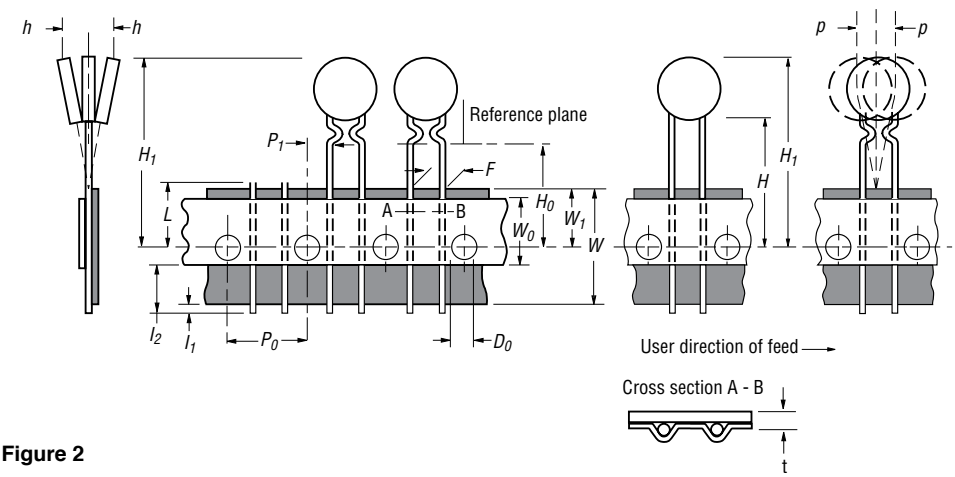

Reel Dimensions - Figure 2

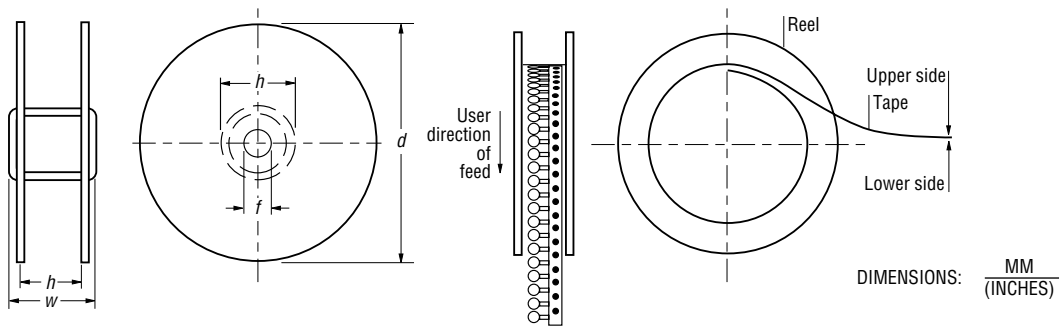

Specifications are subject to change without notice.
The device characteristics and parameters in this data sheet can and do vary in different applications and actual device performance may vary over time.
Users should verify actual device performance in their specific applications.