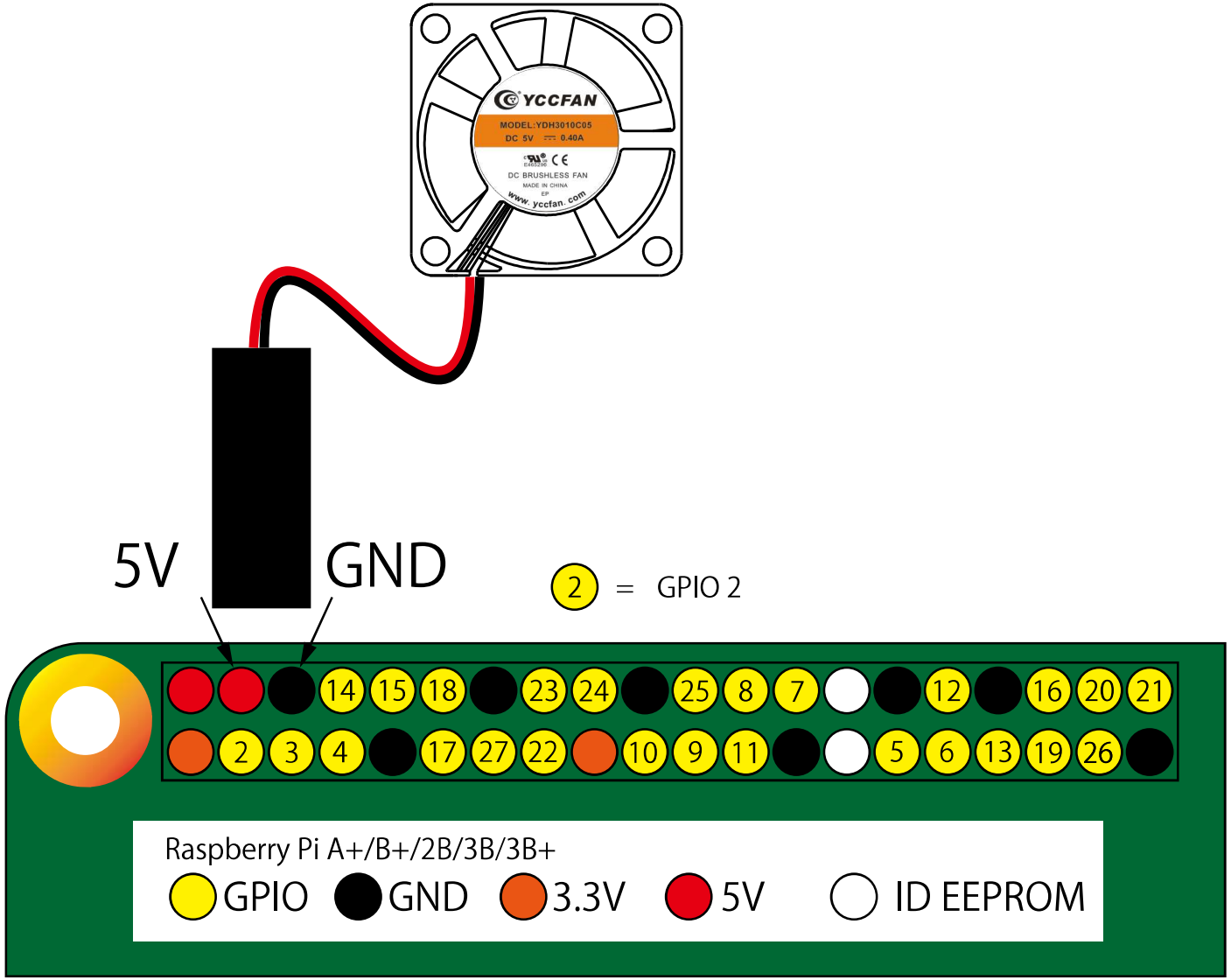
YCCFAN
MODEL:YDH3010C05
DC 5V 0.40A
DC BRUSHLESS FAN
MADE IN CHINA
www.yccfan.com
5V
GND
2 = GPIO 2
14 15 18 23 24 25 8 7 12 16 20 21
2 3 4 17 27 22 10 9 11 5 6 13 19 26
Raspberry Pi A+/B+/2B/3B/3B+
GPIO
GND
3.3V
5V
ID EEPROM