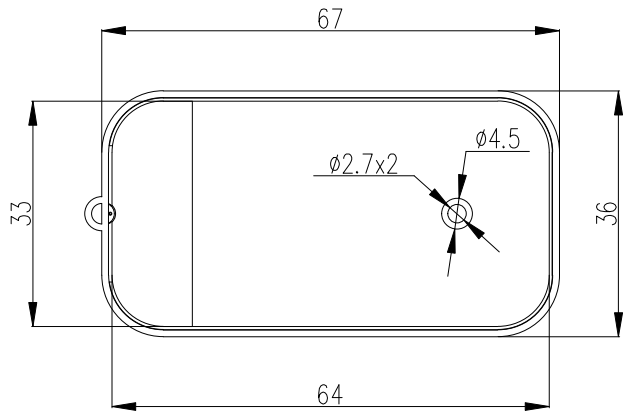
67
33
36
64
ø2.7x2
ø4.5

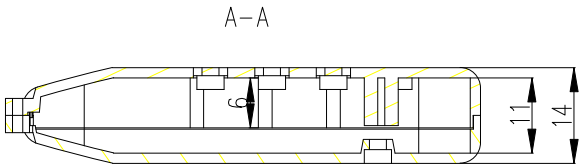
A–A
6
11
14

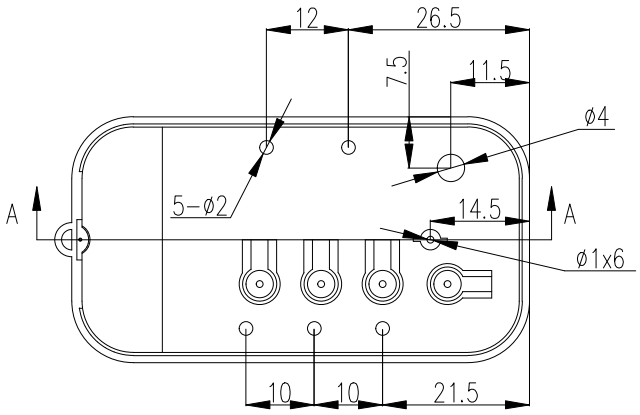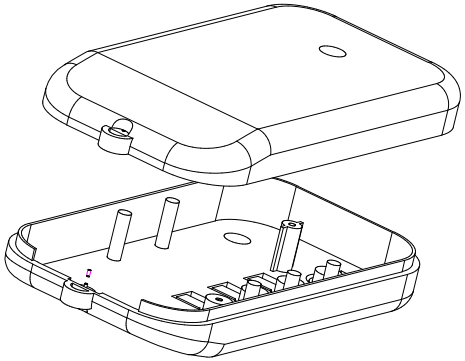
12
26.5
7.5
11.5
ø4
5–ø2
A
A
14.5
ø1x6
10
10
21.5