参考資料

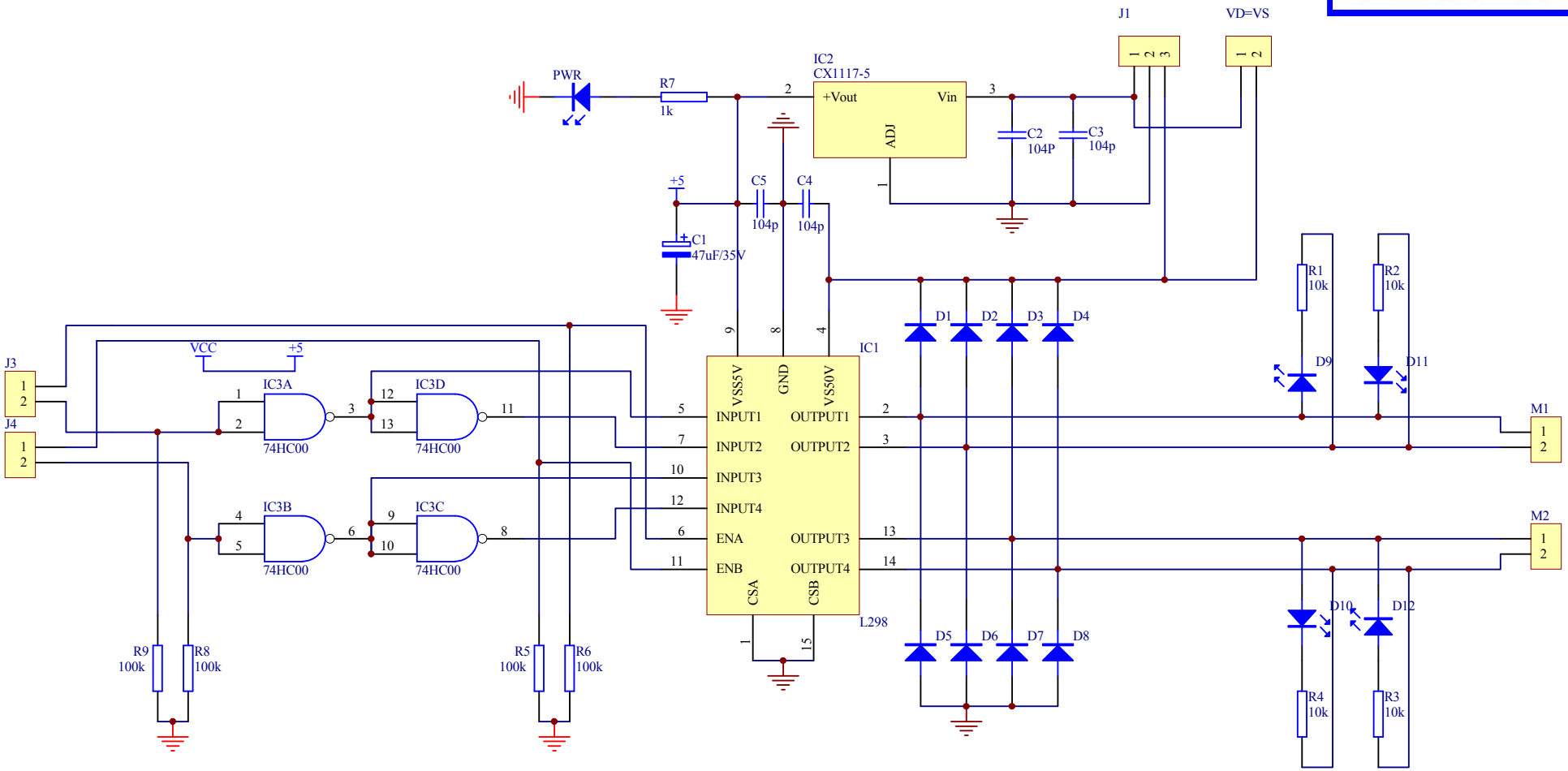

Title		
Size A4	Number	Revision
Date: 19-Oct-2009		Sheet of
File: D:\plan\产品记录\DF-MDV1.0-1.3电机驱动\DFMDV.ddb		Drawn By