OptoSupply
Light It Up

Super Flux Warm White LED

OSM74EZ2C1P

■Features

- High Luminous Super Flux Output
- UV Resistant Epoxy
- Long Lifetime Operation
- Water Clear Type

■Outline Dimension

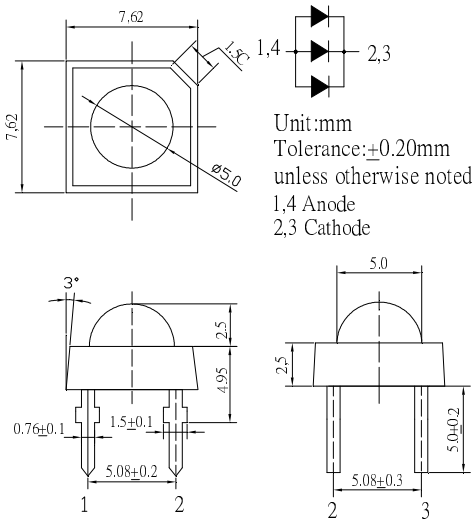

■Applications

- General Purpose Indicators
- Small Area Illuminations
- Back Lighting
- Other Lighting

■Absolute Maximum Rating (Ta=25℃)

Item	Symbol	Value	Unit
DC Forward Current	I_F	90	mA
Pulse Forward Current#	I_{FP}	360	mA
Reverse Voltage	V_R	5	V
Power Dissipation	P_D	324	mW
Operating Temperature	Topr	-30 ~ +85	℃
Storage Temperature	Tstg	-40 ~ +100	℃
Lead Soldering Temperature	Tsol	260℃/ 5sec	-

#Pulse width Max.10ms , Duty ratio max 1/10

■Directivity

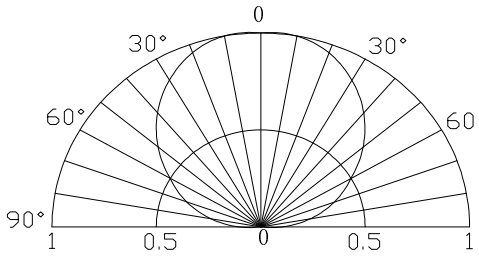

■Electrical -Optical Characteristics (Ta=25℃)

Item	Symbol	Condition	Min.	Typ.	Max.	Unit
DC Forward Voltage*1	V_F	I_F=90mA	2.9	3.1	3.6	V
DC Reverse Current	I_R	V_R=5V	-	-	30	μA
Luminous Flux*2	Φ_V	I_F=90mA	-	25	-	lm
Color Temperature*3	CCT	I_F=90mA	-	3800	-	K
Chromaticity Coordinates*4	x	I_F=90mA	-	0.38	-	
	y	I_F=90mA	-	0.39	-	
50% Power Angle	$2\theta_{1/2}$	I_F=90mA	-	120	-	deg

*1 Tolerance of measurements of forward voltage is ±0.1V
*2 Tolerance of measurements of luminous flux is ±15%
*3 Tolerance of measurements of color temperature is ±10%
*4Tolerance of measurements of chromaticity coordinates is ±10%

InGaN LED

TYPICAL ELECTRICAL/OPTICAL CHARACTERISTIC CURVES