OptoSupply

5mm Ultra Red & Blue & Pure Green LED

OSTB5131A-IC

■Features

- High Luminous Output
- Red/Pure Green/Blue Flash LED
- Superior Weather-resistance
- Water Clear Type

■Applications

- Toys
- Games
- Audio

■Outline Dimension

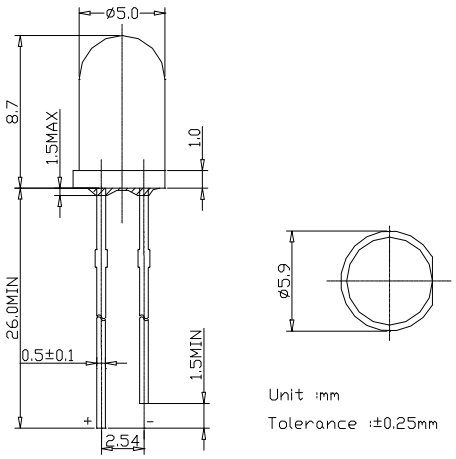

■Absolute Maximum Rating (Ta=25℃)

Item	Symbol	Value	Unit
DC Forward Current	I_F	25	mA
Pulse Forward Current*	I_{FP}	100	mA
Reverse Voltage	V_R	5	V
Power Dissipation	P_D	200	mW
Operating Temperature	Topr	-40 ~ +95	℃
Storage Temperature	Tstg	-40 ~ +100	℃
Lead Soldering Temperature	Tsol	260℃/5sec	–

■Directivity

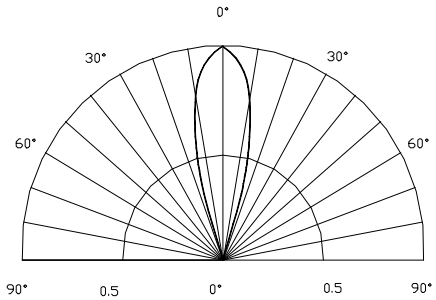

■Electrical -Optical Characteristics (Ta=25℃)

Item	Symbol	Condition	Min.	Typ.	Max.	Unit
DC Forward Voltage	V_F (R/)	I_F=20mA	-	2.0	2.5	V
	V_F (B/G)	I_F=20mA	-	3.6	4.2	V
DC Reverse Current	I_R	V_R=5V	-	-	30	μA
Domi. Wavelength	**W_D(Red)**	I_F=20mA	-	640	-	nm
	W_D(Green)	I_F=20mA	-	525	-	nm
	W_D(Blue)	I_F=20mA	-	470	-	nm
Luminous Intensity	**Iv(Red)**	I_F=20mA	-	300	-	mcd
	Iv(Green)	I_F=20mA	-	550	-	mcd
	Iv(Blue)	I_F=20mA	-	350	-	mcd
50% Power Angle	$2\theta_{1/2}$	I_F=20mA	-	30	-	deg