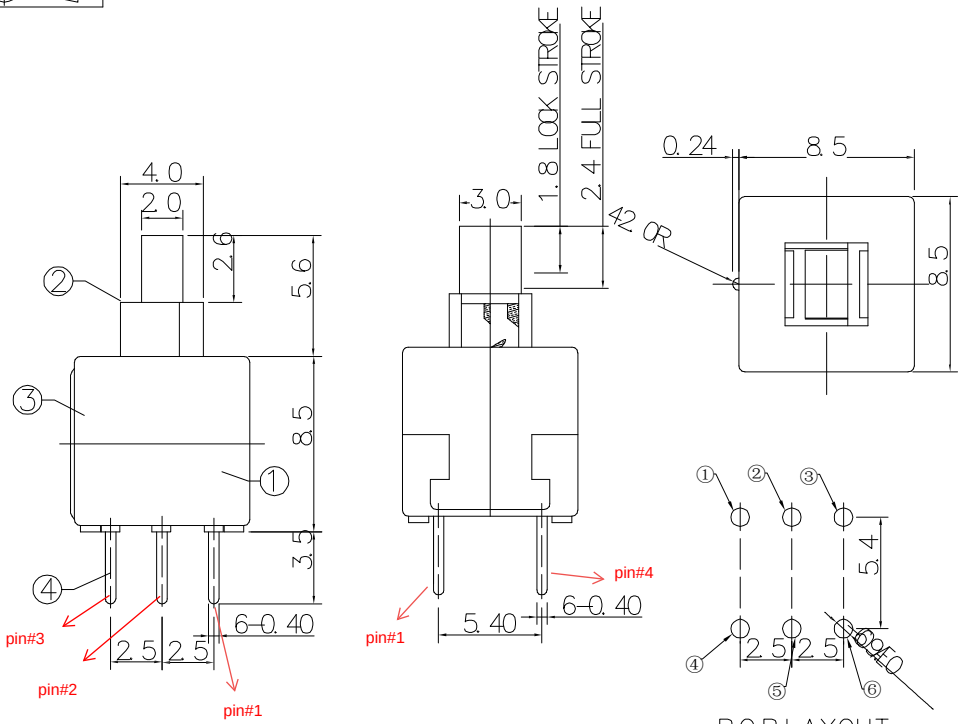

P.C.B LAYOUT
TOP VIEW

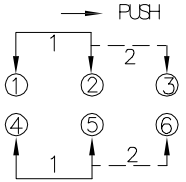

SCHEMATIC (NON SHORTING)

ELECTRICAL CHARACTERISTICS

1. RATING: DC 30V 0.1A
2. CONTACT RESISTANCE: 100mW MAX
3. INSULATION RESISTANCE: 100MW MIN
4. DIELECTRIC STRENGTH: AC 250V(50~60Hz)/60S

MECHANICAL CHARACTERISTICS

1. PRACTICAL TEMPERATURE RANG: -25℃~+70℃
2. OPERATING FORCE: 230± 50gf
3. MECHANICAL LIFE: 10,000 cycles

NO.	PARTS	MATERIALS	Q'TY	FINISH
8				
7	CONTACT	BRONZE	2	Ag PLATED
6	CAM STICK	STEEL WIRE	1	NATURAL
5	TERMINAL	BRASS	6	Ag PLATED
4	SPRING	STEEL WIRE	1	NATURAL
3	COVER	PBT	1	BLACK
2	BUTTON	POM	1	WHITE/BLACK
1	CASE	PBT	1	BLACK

TOLERANCE UNLESS SPECIFIED
WITHIN 1.5mm: ±0.1mm
OVER 1.5mm: ±0.2mm

ISSUE	DATE	DESCRIPTIONS OF REVISION	APPD.
A	25-Jun-2011		

TITLE : PUSH SWITCH
UNIT : mm
DRWG NO.:
MODEL: PB-22E85L
SCALE: 5:1
DWN.
CHK'D
APPD.
XIAMEN JINBEILI ELECTRONICS CO.,LTD