YIC Ceramic Filter (LT/LTM Series)

LT Series of Ceramic Filter for Communication 450/455KHz

● TECHNICAL CHARACTERISTICS

Part Number		Center Frequency (kHz)	Insertion loss (dB)max	Pass Band Ripple (dB)max	6dB Band Width (kHz)min	40dB Band Width (kHz)max (LT455□U)	50dB Band Width (kHz)max (LT455□W)	Stop Band Attenuation fo±100kHz(dB)min		Inpup/Output Impedance (Ω)
								(LT455□U)	(LT455□W)	
LT450/455BU	LT450/455BW	450/455±2.0	4	2	±15	±30	±30	28	40	1500
LT450/455CU	LT450/455CW	450/455±2.0	4	2	±12.5	±24	±24	28	40	1500
LT450/455DU	LT450/455DW	450/455±1.5	4	2	±10	±20	±20	28	40	1500
LT450/455EU	LT450/455EW	450/455±1.5	6	2	±7.5	±15	±15	28	40	1500
LT450/455FU	LT450/455FW	450/455±1.5	6	2	±6	±12.5	±12.5	28	40	2000
LT450/455GU	LT450/455GW	450/455±1.5	6	2	±4.5	±10	±10	28	40	2000
LT450/455HU	LT450/455HW	450/455±1.0	6	2	±3	±9	±9	28	40	2000
LT450/455IU	LT450/455IW	450/455±1.0	6	2	±2	±7.5	±7.5	28	40	2000
LT450/455HTU	LT450/455HTW	450/455±1.0	6	2	±3	±9	±9	35	40	2000

● TEST CIRCUIT

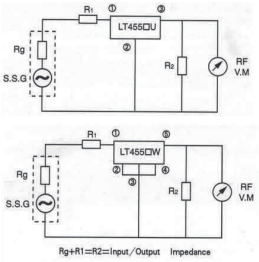

● CHARACTERISTICS

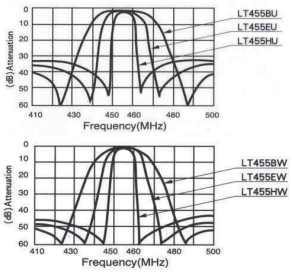

LTM Series of Ceramic Filter for Communication 450/455KHz

● TECHNICAL CHARACTERISTICS

Part Number		Center Frequency (kHz)	Insertion loss (dB)max	Pass Band Ripple (dB)max	6dB Band Width (kHz)min	40dB Band Width (kHz)max (LTM455□U)	50dB Band Width (kHz)max (LTM455□W)	Stop Band Attenuation fo±100kHz(dB)min		Inpup/Outpu tImpedance
								(LTM455□U)	(LTM455□W)	
LTM450/455BU	LTM450/455BW	450/455±2.0	4	2	±15	±30	±30	28	40	1500
LTM450/455CU	LTM450/455CW	450/455±2.0	4	2	±12.5	±24	±24	28	40	1500
LTM450/455DU	LTM450/455DW	450/455±1.5	4	2	±10	±20	±20	28	40	1500
LTM450/455EU	LTM450/455EW	450/455±1.5	6	2	±7.5	±15	±15	28	40	1500
LTM450/455FU	LTM450/455FW	450/455±1.5	6	2	±6	±12.5	±12.5	28	40	2000
LTM450/455GU	LTM450/455GW	450/455±1.5	6	2	±4.5	±10	±10	28	40	2000
LTM450/455HU	LTM450/455HW	450/455±1.0	6	2	±3	±9	±9	28	40	2000
LTM450/455IU	LTM450/455IW	450/455±1.0	6	2	±2	±7.5	±7.5	28	40	2000
LTM450/455HTU	LTM450/455HTW	450/455±1.0	6	2	±3	±9	±9	35	60	2000

● TEST CIRCUIT

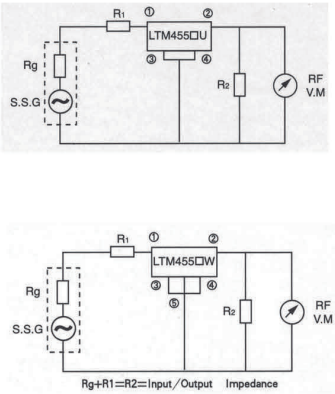

● CHARACTERISTICS

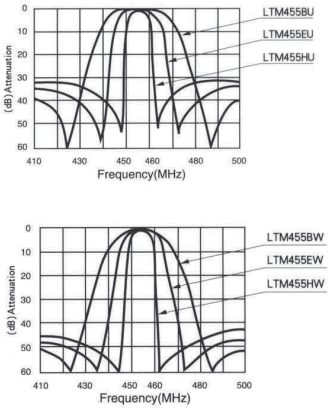

寸法図

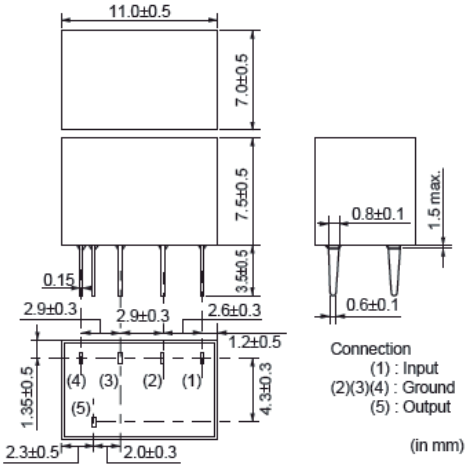

LT xW

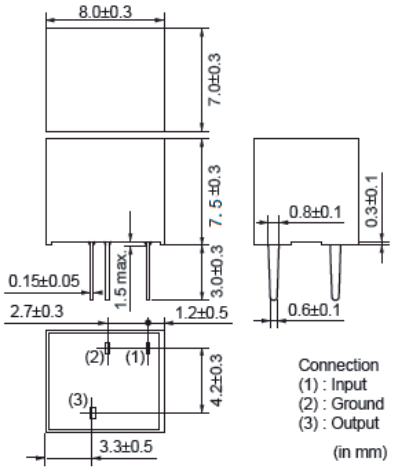

LT xU

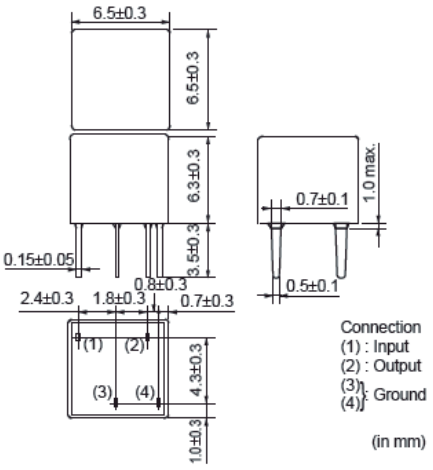

LTM xU

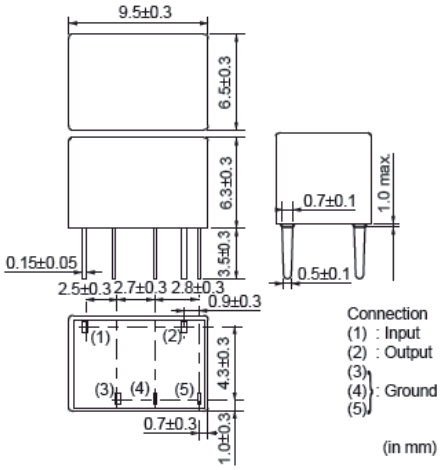

LTM xW